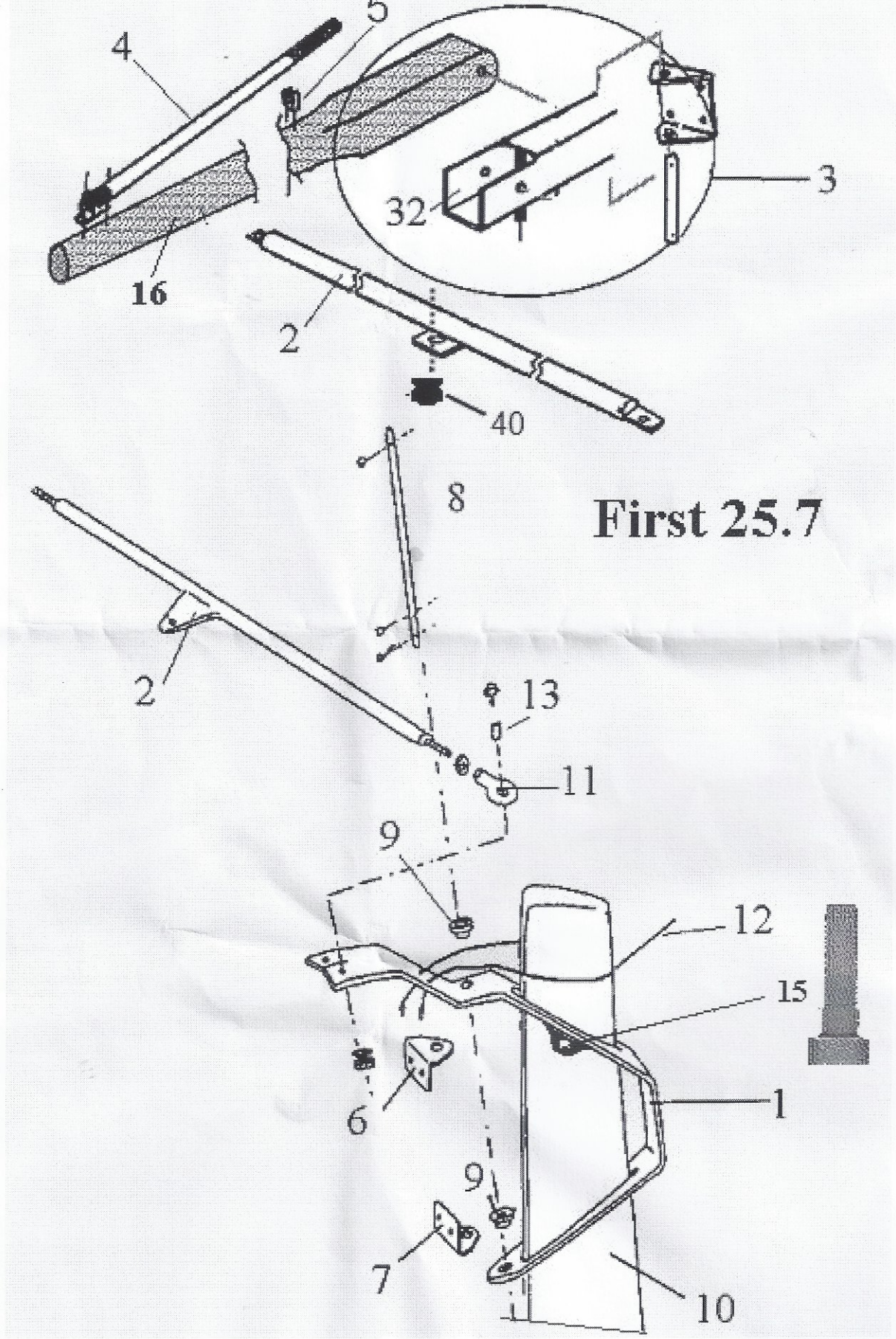

SYSTEME DE DIRECTION

SYSTEME DE DIRECTION

option	Pos	Article	Désignation	Qté par bateau	VERSION / OPTION	SS_FAM	Cq Début	Cq Fin
	1	067190	FOURR SAFRAN 18257 PR TENDON	2,000				661
	1	148931	FOURR SAFRAN 18257 TENDON N2	2,000			662	
	2	067188	BARRE ACCOUPL IN 18257	1,000				
	2	084590	PASSE FIL CAOUT DA100 140 30	1,000				
	3	028305	TETE BARRE 11210 COMPLETE	1,000				
	4	026030	"STICK L609 ""GOLF"""	1,000				242
	4	142455	STICK GOLF L600 SPINLOCK	1,000			243	
	5	034763	PINCE STICK GOLF	1,000				650
	6	034775	FEMELOT SAFRAN 10260 IN.	2,000				314
	6	036207	FEMELOT HAUT SAFRAN 10210	2,000			315	
	7	034775	FEMELOT SAFRAN 10260 IN.	2,000				
	8	034774	AXE IN.D12 L460	2,000				
	9	035103	COUSSINET SAFRAN 10260	4,000				
	10	036434	SAFRAN 10260/11210 BD&TD NM	2,000				
	11	066521	TENDON ELASTO/SYST.DIR.11212	3,000				
	12	035742	SANDOW BLANC D10 L 550	2,000				
	13	017994	RONDELLE NYL.D 10X20 EPAULEE	2,000				
	15	936150	VIS MTX NYL TH M16X 50	4,000				
	16	W01798	BARRE FRANCHE BO.10260	1,000				
	32	028305	TETE BARRE 11210 COMPLETE	1,000				
	40	084590	PASSE FIL CAOUT DA100 140 30	1,000				